Aim: Study of 555 Timer IC as Astable multivibrator with different frequency.

Electronic Parts Required:

(i) Power supply, 1 No : +15 V
(ii) Registers: 1 kΩ, 10 kΩ, 100 kΩ, and 1 MΩ
(iii) Capacitors: 0.001µF, 0.01µF, 0.1µF, 1µF, and 10µF
(iv) IC 555: 1 No
(v) LED, 1 Nos
(vi) Breadboard = 1 No
(vii) CRO = 1 No
(viii) Single strand wires = 4 - 5 Nos.

Introduction:

The 8-pin 555 timer is one of the most useful ICs ever made and it is used in many projects. With just a few external components it can be used to build many circuits, not all of them involve timing!

A popular version is the NE555 and this is suitable in most cases where a '555 timer' is specified. The 556 is a dual version of the 555 housed in a 14-pin package, the two timers (A and B) share the same power supply pins. The bellow circuit diagrams show a 555, but they could all be adapted to use one half of a 556.

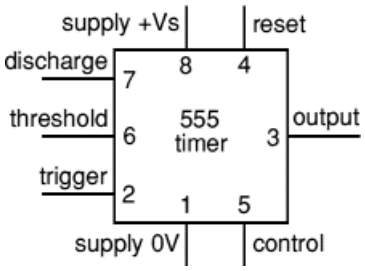

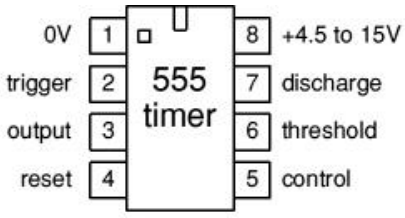

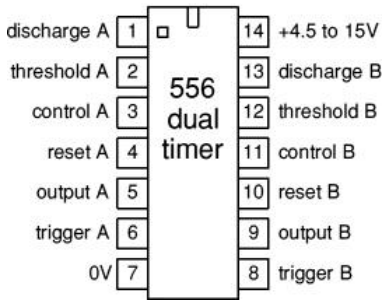

Example circuit symbol *Actual pin arrangements of 555 and 556 ICs*

Low power versions of the 555 are made, such as the ICM7555, but these should only be used when specified (to increase battery life) because their maximum output current of about 20mA

(with a 9V supply) is too low for many standard 555 circuits. The ICM7555 has the same pin arrangement as a standard 555.

The circuit symbol for a 555 (and 556) is a box with the pins arranged to suit the circuit diagram: for example 555 pin 8 at the top for the +Vs supply, 555 pin 3 output on the right. Usually just the pin numbers are used and they are not labelled with their function.

The 555 and 556 can be used with a supply voltage (Vs) in the range 4.5 to 15V (18V absolute maximum).

Standard 555 and 556 ICs create a significant 'glitch' on the supply when their output changes state. This is rarely a problem in simple circuits with no other ICs, but in more complex circuits a **smoothing capacitor** (eg 100µF) should be connected across the +Vs and 0V supply near the 555 or 556.

The input and output pin functions are described briefly below and there are fuller explanations covering the various circuits:

- **Astable** - producing a square wave
- **Monostable** - producing a single pulse when triggered

Inputs of 555/556

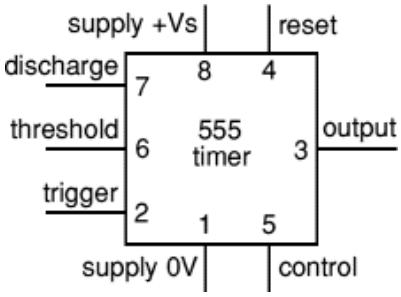

Trigger input: when < $^1/_3$ Vs ('active low') this makes the output high (+Vs). It monitors the discharging of the timing capacitor in an astable circuit. It has a high input impedance > 2MΩ.

Threshold input: when > $^2/_3$ Vs ('active high') this makes the output low (0V)*. It monitors the charging of the timing capacitor in astable and monostable circuits. It has a high input impedance > 10MΩ.

* providing the trigger input is > $^1/_3$ Vs, otherwise the trigger input will override the threshold input and hold the output high (+Vs).

Reset input: when less than about 0.7V ('active low') this makes the output low (0V), overriding other inputs. When not required it should be connected to +Vs. It has an input impedance of about 10kΩ.

Control input: this can be used to adjust the threshold voltage which is set internally to be $^2/_3$ Vs. Usually this function is not required and the control input is connected to 0V with a 0.01µF capacitor to eliminate electrical noise. It can be left unconnected if noise is not a problem.

The **discharge pin** is not an input, but it is listed here for convenience. It is connected to 0V when the timer output is low and is used to discharge the timing capacitor in astable and monostable circuits.

555/556 Astable

An astable circuit produces a 'square wave', this is a digital waveform with sharp transitions between low (0V) and high (+Vs). Note that the durations of the low and high states may be different. The circuit is called an astable because it is not stable in any state: the output is continually changing between 'low' and 'high'.

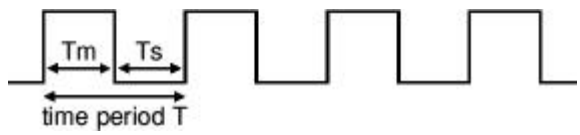

555 astable output, a square wave (Tm and Ts may be different)

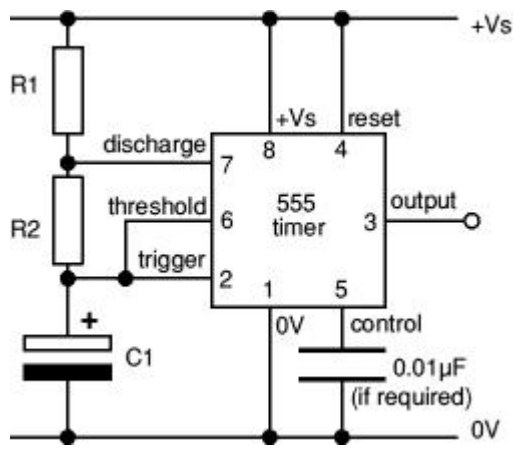

555 astable circuit

The time period (T) of the square wave is the time for one complete cycle, but it is usually better to consider frequency (f) which is the number of cycles per second.

T = 0.7 ×(R1 + 2R2) × C1 and f = 1.4 / (R1 + 2R2) × C1

T = time period in seconds (s)
f = frequency in hertz (Hz)
R1 = resistance in ohms (Ω)
R2 = resistance in ohms (Ω)
C1 = capacitance in farads (F)

The time period can be split into two parts: **T = Tm + Ts**
Mark time (output high): **Tm = 0.7 × (R1 + R2) × C1**
Space time (output low): **Ts = 0.7 × R2 × C1**

Many circuits require Tm and Ts to be almost equal; this is achieved if R2 is much larger than R1.

For a standard astable circuit Tm cannot be less than Ts, but this is not too restricting because the output can both sink and source current. For example an LED can be made to flash briefly with long gaps by connecting it (with its resistor) between +Vs and the output. This way the LED is on during Ts, so brief flashes are achieved with R1 larger than R2, making Ts short and Tm long. If Tm must be less than Ts a diode can be added to the circuit as explained under duty cycle below.

Choosing R_1, R_2 and C_1

R_1 and R_2 should be in the range 1kΩ to 1MΩ. It is best to choose C1 first because capacitors are available in just a few values.

- **Choose C_1** to suit the frequency range you require (use the table as a guide).
- **Choose R_2** to give the frequency (f) you require. Assume that R_1 is much smaller than R_2 (so that Tm and Ts are almost equal), then you can use:

$$R_2 = \frac{0.7}{f \times C1}$$

- **Choose R1** to be about a tenth of R2 (1kΩ min.) unless you want the mark time Tm to be significantly longer than the space time Ts.
- If you wish to use a **variable resistor** it is best to make it R2.
- If R1 is variable it must have a fixed resistor of at least 1kΩ in series (this is not required for R2 if it is variable).

Table - I

				555 Astable Frequencies					
Sl. No	**C1**	**R1**	**R2**	**f** (Theory)	**Tm** (Expt)	**Ts** (Expt)	**T = Tm + Ts** (Expt)	**f** (Expt)	**% Error**
1	0.001μF	1 kΩ	10 kΩ	68 kHz					
2	"	10 kΩ	100 kΩ	6.8 kHz					
3	"	100 kΩ	1 MΩ	680 Hz					
4	0.01μF								
5	"								

6	"								
7	0.1μF								
8	"								
9	"								
8	1μF								
9	"								
10	10μF								
11									
12									

***